REV	DESCRIPTION	ECN/ECR	DATE	DRAWN BY
A0	新訂圖面	——	03/23/2018	王 奔

RoHS Compliant

Halogen Free

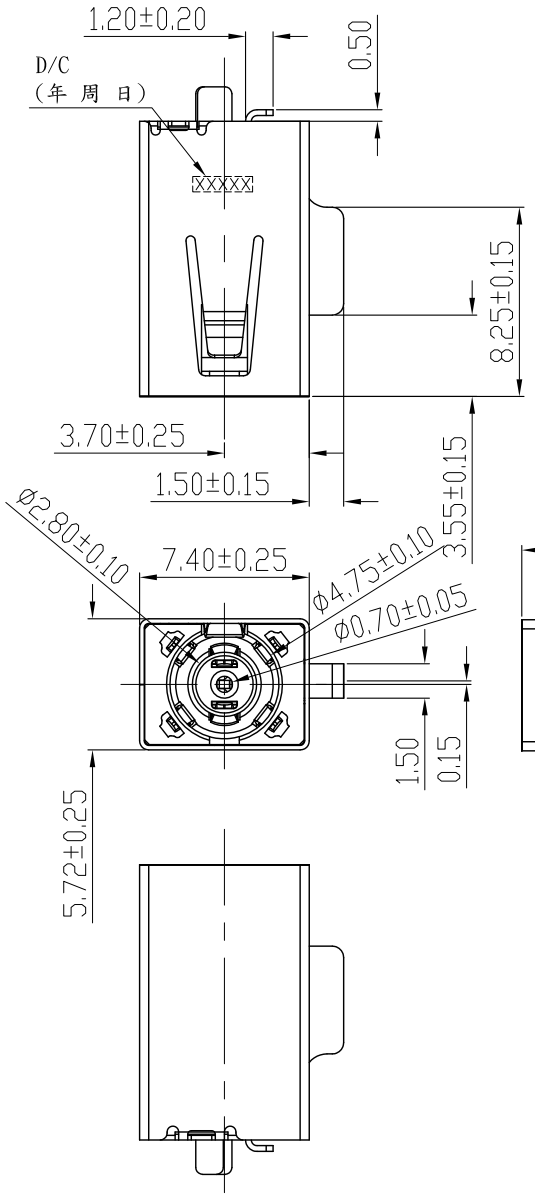

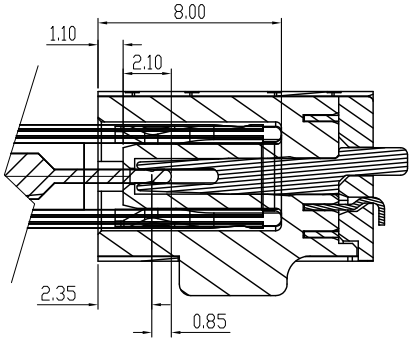

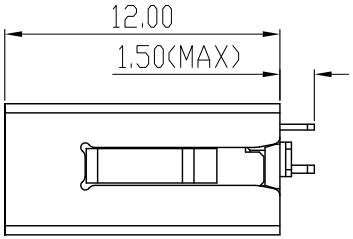

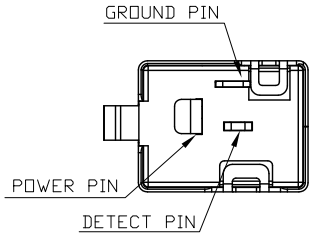

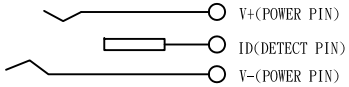

D/C 說明: 18043

- 星期三
- 第四周
- 2018年

NOTES:
1.MATERIAL:
1-1:HOUSING:LCP(E130i);UL 94V-0,COLOR:BLACK
COLOR:BLACK
1-2:GROUND PIN:PHOSPHOR BRONZE(C5210R-EH);T=0.25mm
TREATMENT:SEE PLATING TABLE
With 50u"NI min UnderPlating overall
1-3:POWER PIN:PHOSPHOR BRONZE(C5210R-EH);T=0.25mm
TREATMENT:SEE PLATING TABLE
With 50u"NI min UnderPlating overall
1-4:DETECT PIN:PHOSPHOR BRONZE(C5210R-EH);T=0.35mm
TREATMENT:SEE PLATING TABLE
With 50u"NI min UnderPlating overall
1-5:SHELL:SUS(201);T=0.20mm,TREATMENT:50u" NI
1-6:STOPPLE:LCP(E130i);UL 94V-0,COLOR:BLACK
SPECIFICATION:
2. ELECTRICAL CHARACTERISTICS:
1.1 CONNECTOR RATED CURRENT:7.0A &30° MAX△ T OVER AMBIENT
RATED VOLAGE:19V DC
1.2 INSULATION RESISTANCE 50MOHMS MIN AT
500V DC AFTER 1 MINUTE
1.3 DIELECTRIC WITHSTANDING VOLATAGE: 500V AC FOR 1 MINUTE,
1.4 CONTACT RESISTANCE:30 mOHMS MAX.
3. MECHANICAL CHARACTERISTICS:
2.1 INSERTION FORCE:0.7-2.0 Kgf MAX
EXTRACTION FORCE:0.6-2.0 Kgf
2.2 DURABILITY(INSERTION/EXTRACTION CYCLES):5000 CYCLES
4. REMARK:MOISTURE SENSITIVE DEVICE MSL6-AFTER PACKAGING
HAS BEEN OPEND 8 HOURS,PARTS MUST BE BAKED FOR MIN
5. DAYS AT 40°C & 5% RH

PLATING TABLE:

PART NO.(客戶)	PART NO.	XX	PLATING
DCJ-044-1N03HG	CD4521072001	01	Gold Flash. on contoct area 50u" Ni min underplating
DCJ-044-1N03HP	CD4521072001	02	50u"Ni min,Pd/Ni 30u"min with 5u"Au Plating at contact area

東莞世華電子有限公司
SHYH HWA ELECTRONICS CO.,LTD.(DONGGUAN)
地址:東莞市塘廈鎮諸佛嶺178工業區
TEL:0769-7910020-1 FAX:0769-7910210

DRAWN BY	王 奔	ITEM	SLIM HP DC JACK(7.4*5.72)CH=0.15	ANGLE PROJECTION	UNIT: mm
CHECKED BY					SCALE: 1:1
APPROVED BY		PART NO	CD4521072001-XX	TOLERANCE: .X±0.30 .XX±0.20	DATE