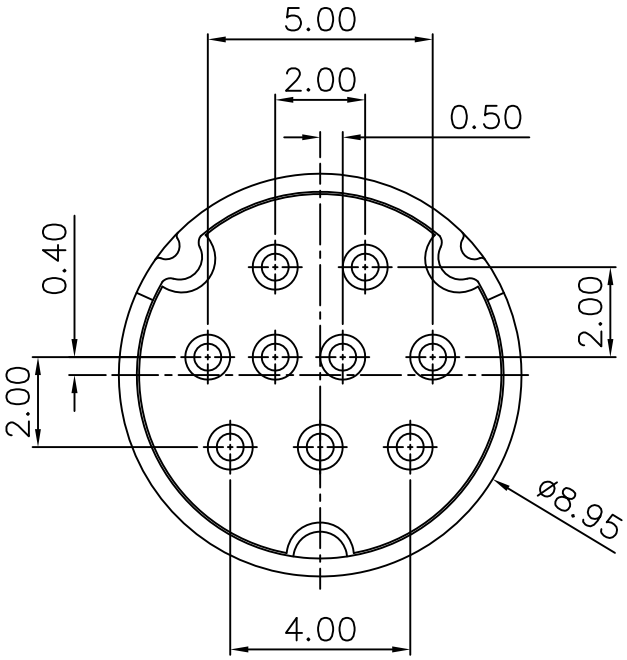

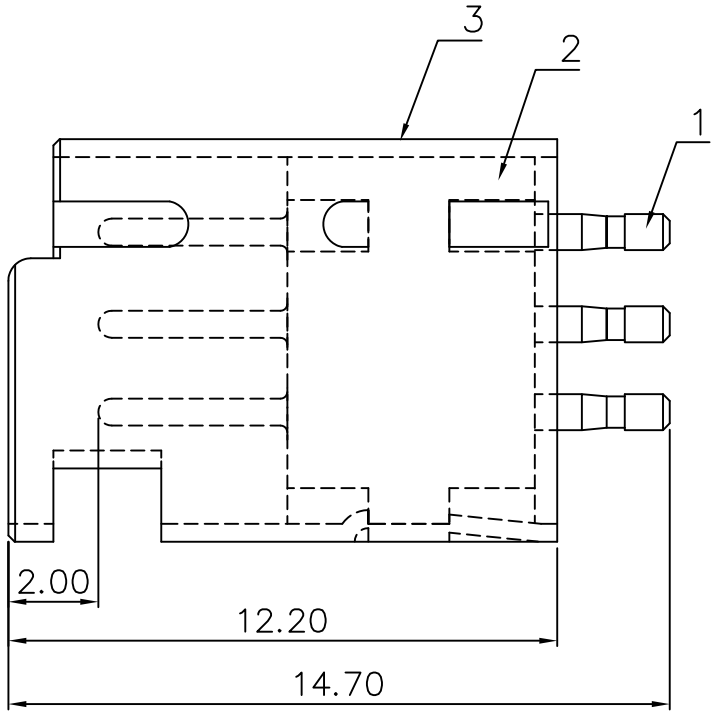

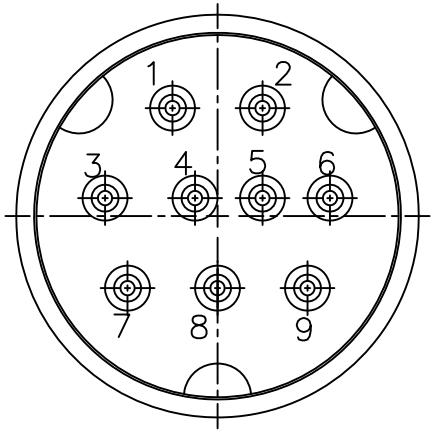

BOM:

項次	名稱	數量	規格	備註
3	SHELL	1	BRASS,T=0.40±0.03MM. NICKEL OR GOLD FLASH PLATED.	
2	INSULATOR	1	PBT+30%GF,UL 94 V-0	
1	PIN	9	BRASS PLATING: SEE TABLE	

ELECTRICAL CHARACTERISTICS:

RATING: 100V AC 1A MAX or
12V DC 2A MAX

INSULATION RESISTANCE:
50mΩ MIN at 250V DC

DIELECTRIC STRENGTH:
250V AC/1 minute

TABLE

XX	PLATING	05	GOLD PLATED 5u" MIN.
00	NICKEL PLATED	06	GOLD PLATED 10u" MIN.
01	TIN PLATED	07	GOLD PLATED 15u" MIN
02	SILVER	08	GOLD PLATED 20u" MIN.
03	GOLD FLASH PLATED	09	GOLD PLATED 30u" MIN.
04	GOLD PLATED 3u"MIN	10	GOLD PLATED 50u" MIN.

東莞世華電子有限公司
SHYH HWA ELECTRONICS CO.,LTD.(DONGGUAN)
地址:東莞市塘廈鎮諸佛嶺178工業區
TEL: 0769-7910020-1 FAX: 0769-7910210

DRAWN BY		ITEM	8-9P成型公頭 (12.2L槽形銅管 PIN12.7L)	ANGLE PROJECTION	UNIT	MM			
CHECKED BY					SCALE	5:1			
APPROVED BY		PART NO	HM08111XX-F	TOLERANCE X.XX±0.20	DATE	11/13/2001	REVISION	DESCRIPTION	DATE