REV	DESCRIPTION	ECN/ECR	DATE	DRAWN BY
A	新訂圖面	——	10/21/2020	陈俊武

RoHS Compliant

Halogen Free

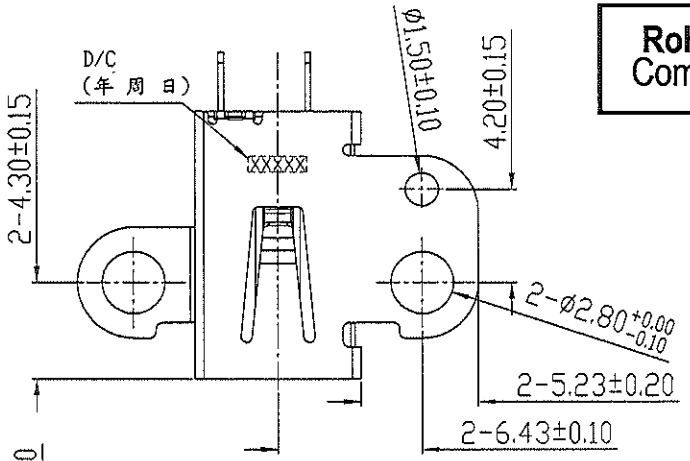

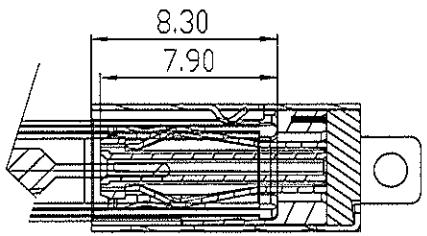

D/C 镭射 說明: 20273

- 星期三
- 第27周
- 2020年

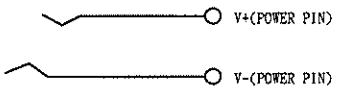

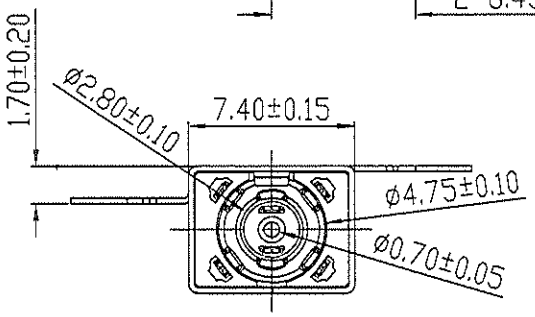

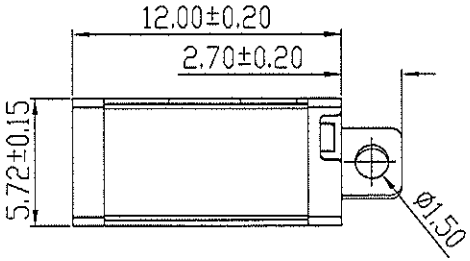

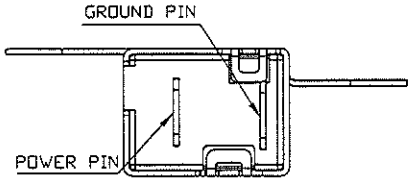

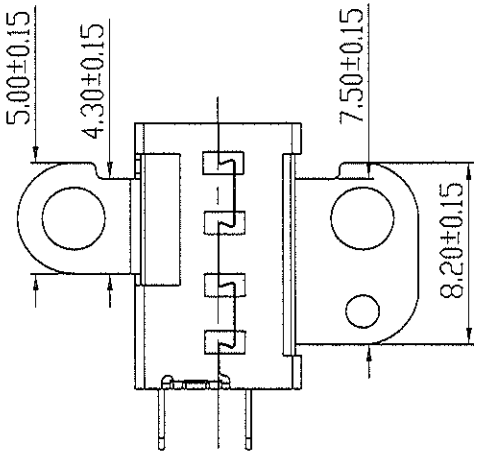

TABLE:

PART NO.(客户)	RATING	PART NO.	XX	TERMINAL MATERIAL
MJDC-351048C1H1	20V/12A	CD4651092010-XX	01	GROUND PIN & POWER PIN: C7035 GOLD FLASH ON CONTACT AREA
MJDC-351048C1H5	20V/12A		02	GROUND PIN & POWER PIN: C7035 Au 30u" ON CONTACT AREA
MJDC-351048C1H7	20V/12A		03	GROUND PIN & POWER PIN: C7035 Au 5u" ON CONTACT AREA

NOTES:
1.MATERIAL:
1-1:HOUSING: LCP(E130I); UL94V-0, COLOR: BLACK
1-2:GROUND PIN: C7035 T=0.25mm
TREATMENT: GOLD ON 50u" NICKEL min UNDERPLATED
1-3:POWER PIN: C7035 T=0.25mm
TREATMENT: GOLD ON 50u" NICKEL min UNDERPLATED
1-4:SHELL: SUS(201); T=0.25mm, TREATMENT: 50u" NICKEL
1-5:STOPPLE: LCP(E130I); UL94V-0, COLOR: BLACK
SPECIFICATION:
2. ELECTRICAL CHARACTERISTICS:
1.1 RATING: SEE TABLE
1.2 INSULATION RESISTANCE 50MOHMS MIN AT 500V DC AFTER 1 MINUTE
1.3 DIELECTRIC WITHSTANDING VOLTAGE: 500V AC FOR 1 MINUTE,
1.4 CONTACT RESISTANCE: 30 mΩ MAX.
3. MECHANICAL CHARACTERISTICS:
2.1 INSERTION FORCE:0.7-2.0 Kgf MAX
EXTRACTION FORCE:0.6-2.0 Kgf
2.2 DURABILITY(INSERTION/EXTRACTION CYCLES): 5000 CYCLES
4. REMARK: MOISTURE SENSITIVE DEVICE MSL6-AFTER PACKAGING HAS BEEN OPENED 8 HOURS,PARTS MUST BE BAKED FOR MIN
5. DAYS AT 40°C & 5% RH

東莞世華電子有限公司
SHYH HWA ELECTRONICS CO.,LTD.(DONGGUAN)
地址:東莞市塘廈鎮諸佛嶺178工業區
TEL:0769-7910020-1 FAX:0769-7910210

DRAWN BY	陈俊武	ITEM	DC JACK 焊線式 CH 1.7(無ID PIN)12A	ANGLE PROJECTION	UNIT: mm
CHECKED BY					SCALE: 1:1
APPROVED BY		PART NO	CD4651092010-XX	TOLERANCE: .X±0.30 .XX±0.20	DATE: 10/21/2020